SANIPEXGROUP

ENVOY CONCEALED SHOWER MIXER W/DIVERTER CP

AQE-ENV-411-CP

10 YEAR GUARANTEE

TECHNICAL DATASHEET

Specifications

Brand	AQUAECO
Range	ENVOY
Product code	AQE-ENV-411-CP
Finish/Colour	CHROME
Product type	CONCEALED SHOWER MIXER
Material	BRASS
Connection Size	1/2"
Test Range	0.2-5 Bar
Min. Operating Pressure	1.0 BAR MP

Technical Information

CONCEALED SHOWER MIXER
WALL MOUNTED
WITH PUSH/PULL DIVERTER
SINGLE LEVER
2X 1/2" INLETS
1X 1/2" OUTLET & 1X 3/4" OUTLET
MIN/MAX INSTALL DEPTH 70-85MM
CARTRIDGE SXM-CAR-EN35-SD-END

Flow Rate Graph

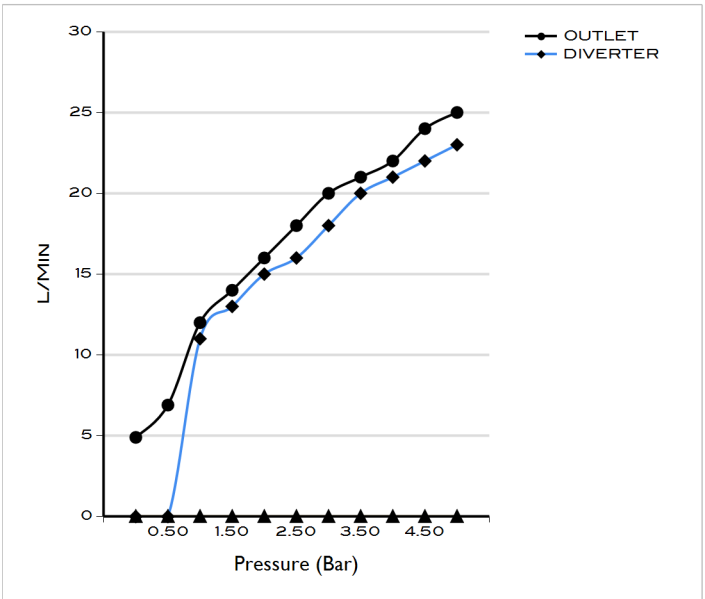

Drawing

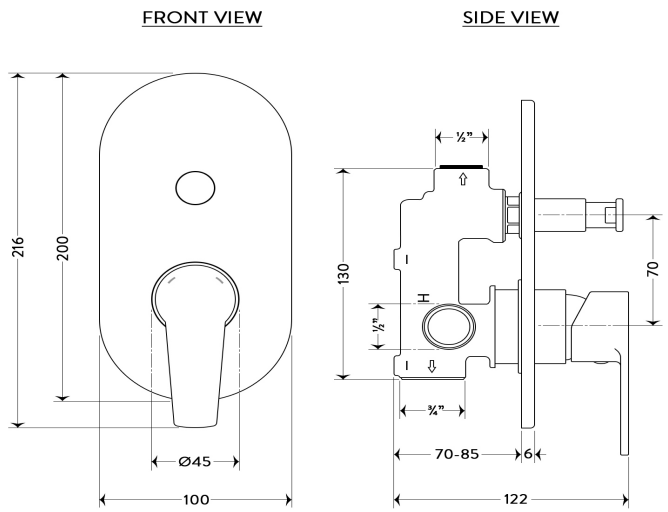

Box contents: CONCEALED MIXER, BACK PLATE, HANDLE, DIVERTER, ALLEN KEY